更改 REV	設變內容 MODIFICATION	日期 DATE	修改 DRAW

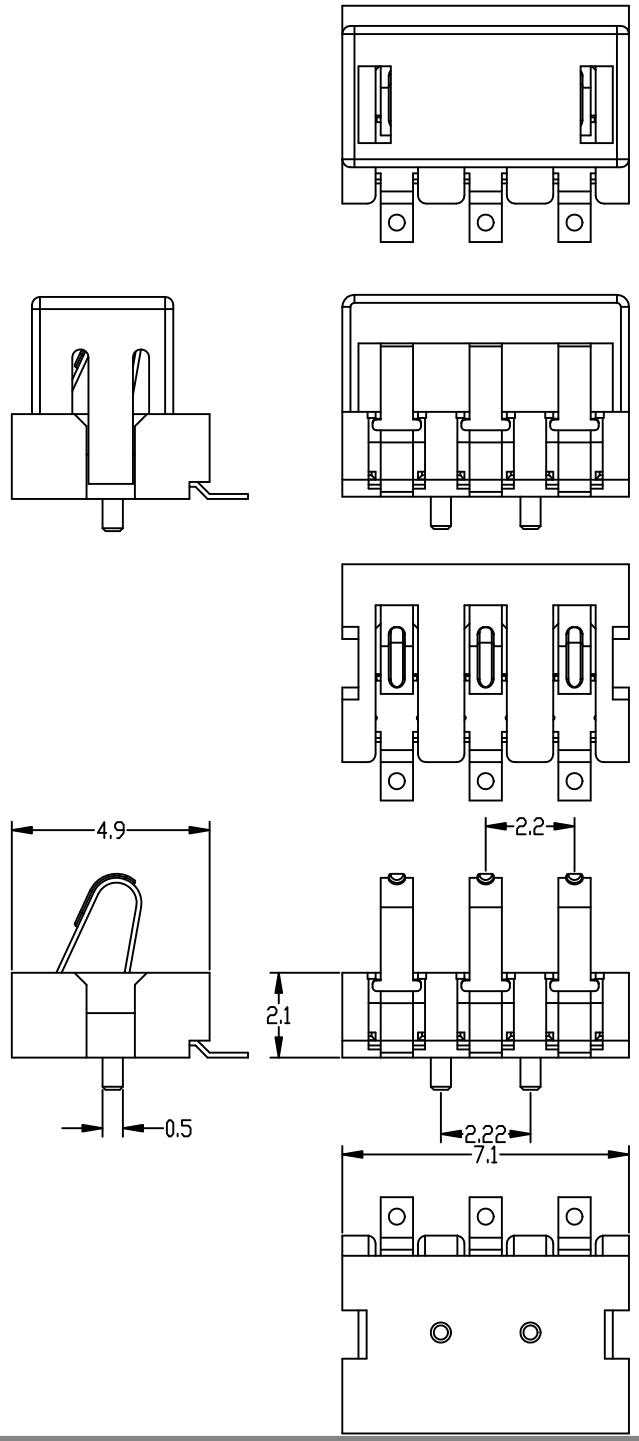

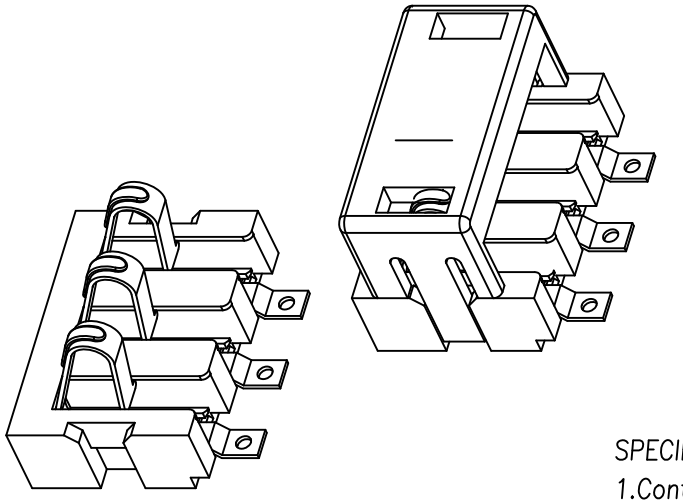

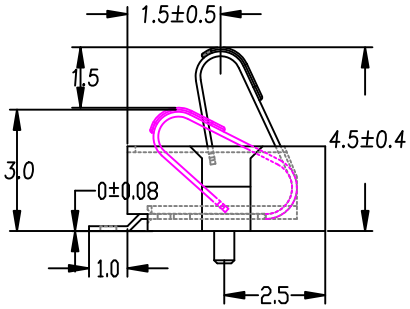

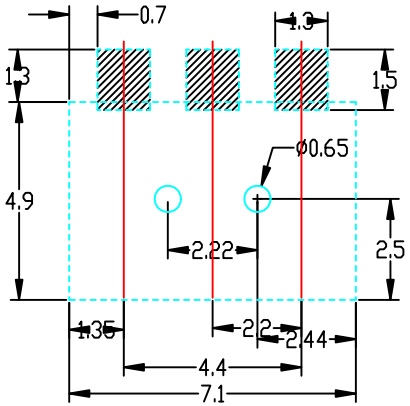

PCB LAYOUT

SPECIFICATIONS:

1.Contact Current Rating:2.4 Amperes/contact.
2.Dielectric Withstanding Voltage:250 VAC/1 Minute
3.Contact Resistance:30 Millohms Maximum.
4.Insulation Resistance:1000 Megaohms Minimum at 100V DC.
5.Operating Temperature:−55° to +125°C.
6.Material:
Ccntact: Beryllium Copper Alloy, selective 30u" gold plating on contact area matt tin on solder area.
Cover Housing: LCP.
Bottom Housing: LCP.

DIMENSION IN mm [Inch]		
TOLERANCE UNLESS OTHERWISE SPECIFIED		
.X±0.3	X.°± 1°	審核 APPROVE
.XX±0.20	.X°± 0.5°	核對 CHECK
.XXX±0.100	.XX°± 0.25°	製圖 DRAW

C

康茂股份有限公司
COMMA ELECTRONIC INC.

名稱 TITLE: Battery Connector Pitch 2.2mm 3Pin Height 2.1mm

CUSTOMER DRAWING

案號 FILE NO.: BCS2.2-1103

圖號 DWG NO.: BCS2.2-1103

圖紙 SIZE: A4

角法 PROJ.

張數 SHEET 1 / 1

比例 SCALE: 1:1

更改 REV: A